Control Panel Views

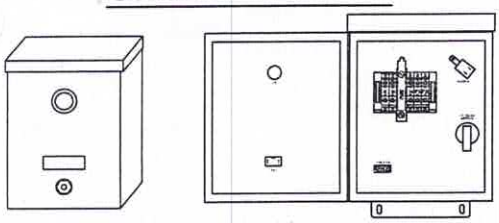

CP20

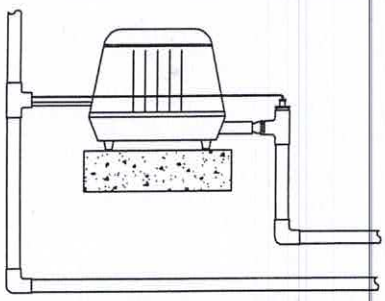

Air Pump Installation

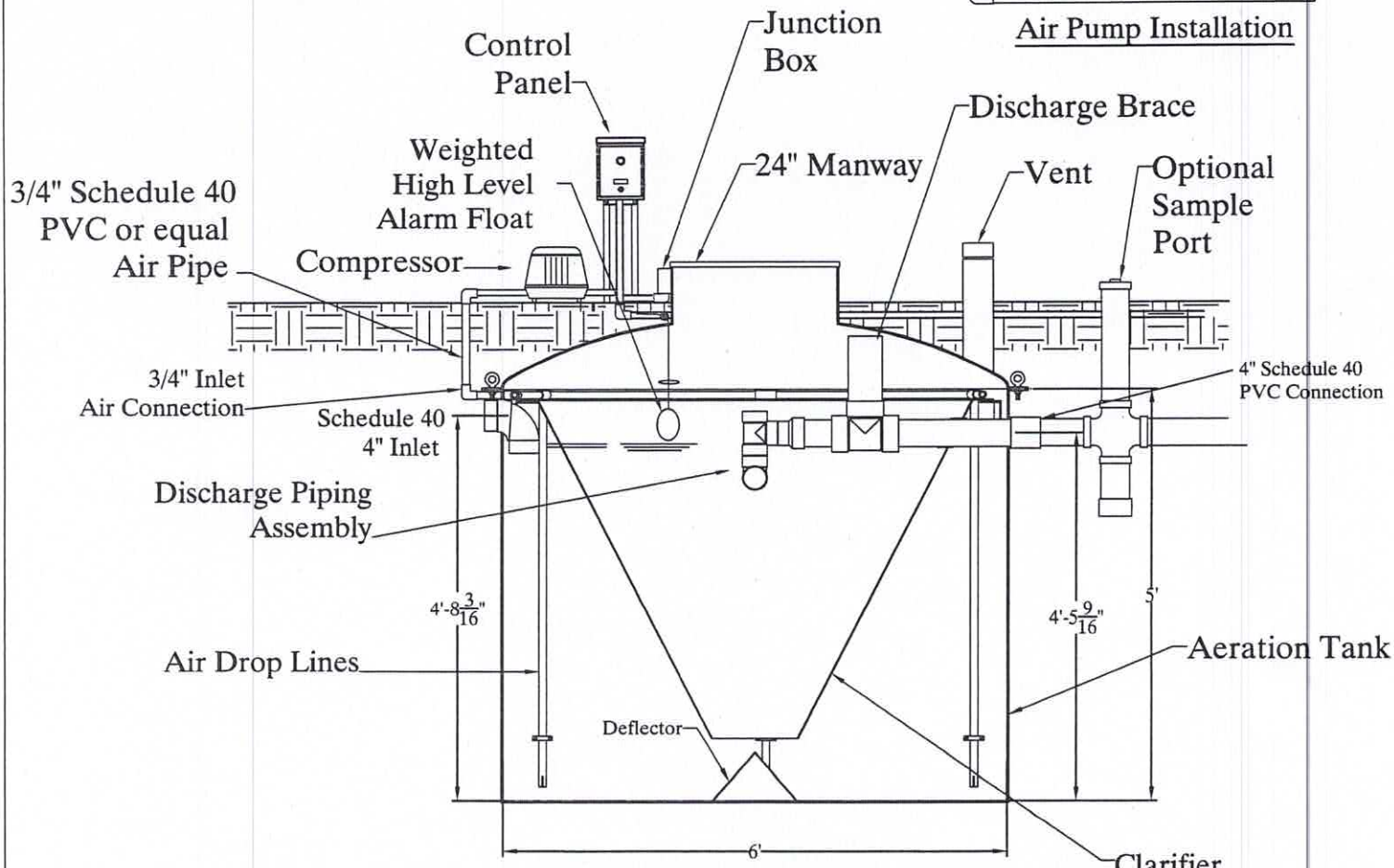

DF50FF AEROBIC TREATMENT UNIT

1) Never place tank directly on rock. Place at least six inches of sand bedding between the tank and rock surface.
2) A small amount of soil or sand should be used around the bottom of the tank to hold it in place. Sand is best. If excavated soil is used, tamp it underneath the tank to provide a good base.
3) The plant should be level within 1/2 inch, edge to edge.
4) Maximum burial depth - 2 feet from top of tank flange with dome or 24" manways and 1 foot from top of tank flange with flat lids. For burial depths beyond 2 feet contact the factory.

Delta Environmental Products, Inc.
P.O. Box 969 Denham Springs, LA 70727

WASTEWATER TREATMENT UNITS
MODEL DF50-FF

DWN BY:	DATE:	SCALE:	DWG. NO.:
C.RACHAL	7/03/07	N.T.S.	DF50-FF